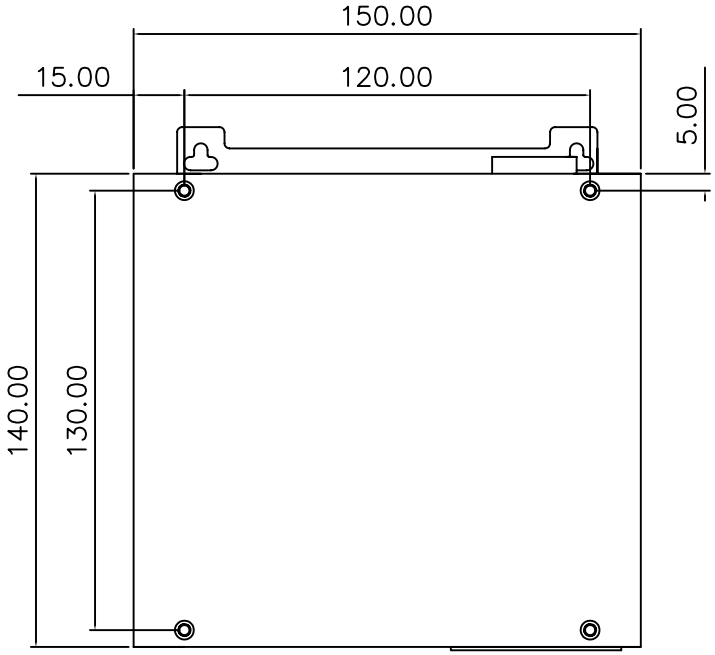

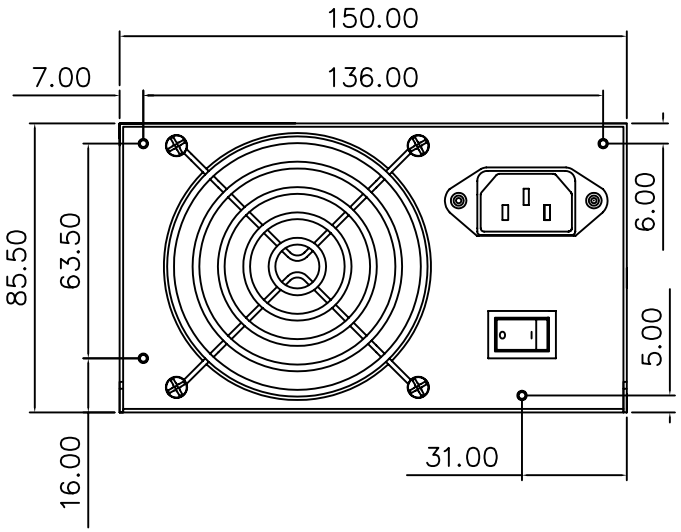

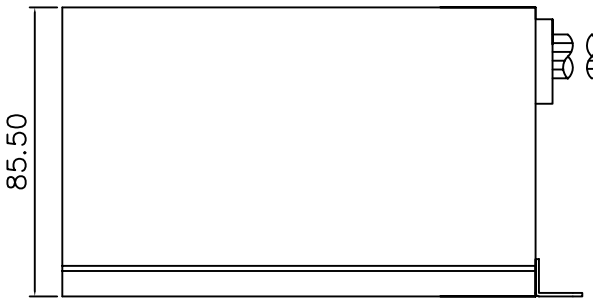

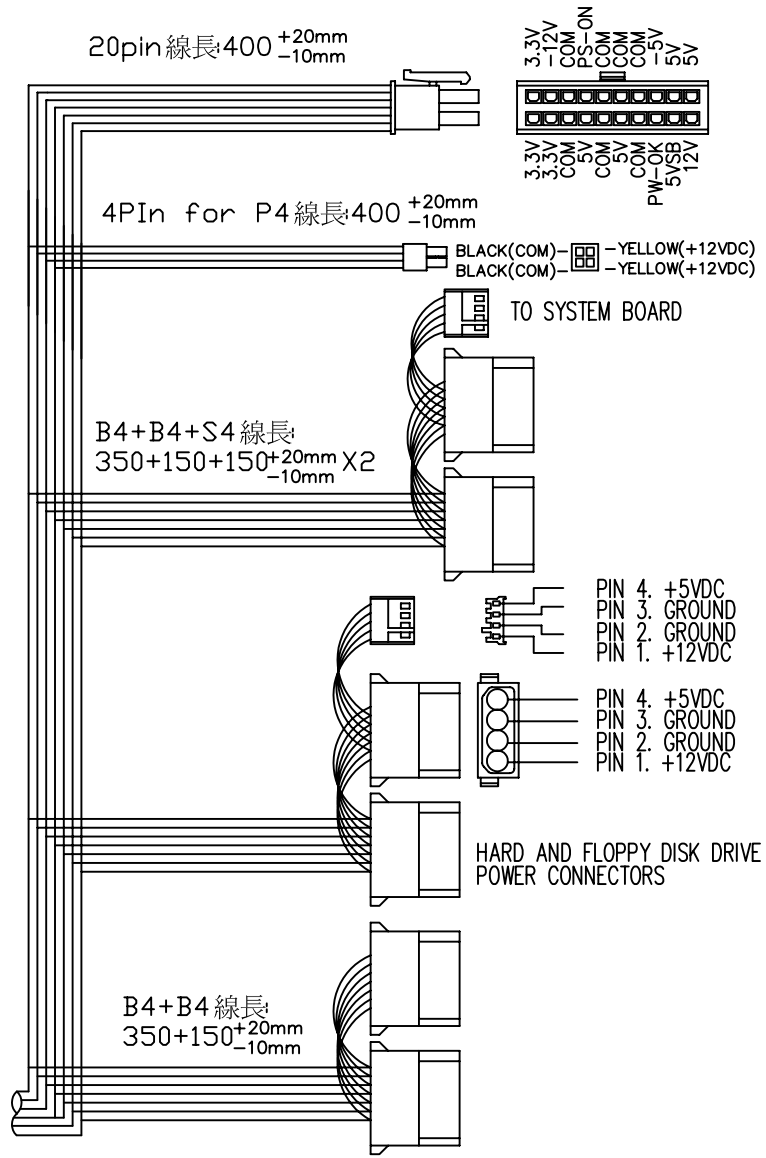

*以上線長皆爲外露線長

BPS Best Power Solution.,Inc		
Size C	Document Number BPS−300SPP	REV 3
Date : 1999.7.5	Sheet 1 of 1	